Product data sheet

Care Solutions · Inox Care

Inox Care Base plate vario,
with cover plate blind

Article number: 2050200008

Product image

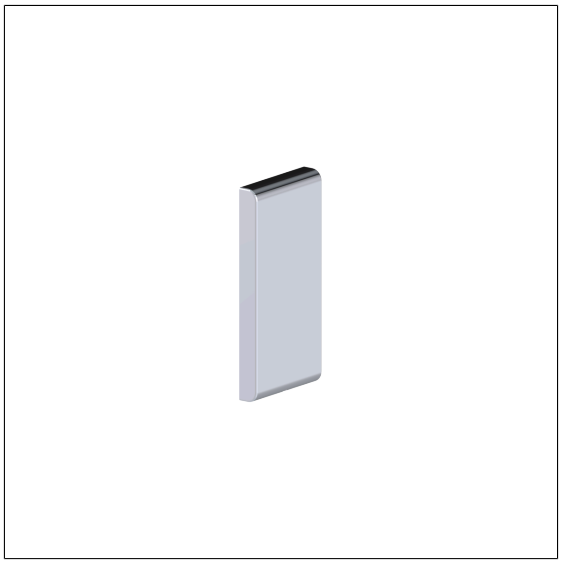

Technical specifications

Product group	5500
Product	Base plate, with cover plate blind
Length	226 mm
Width	110 mm
Height	23 mm
Material	stainless steel, material No. 1.4301 (A2, AISI 304)
Surface	high gloss
Colour	available in Mirror polished (008) and Satin (009)

Technical drawing

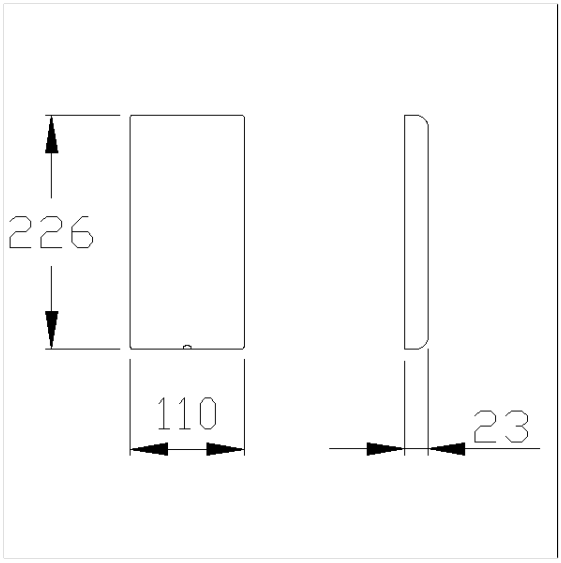

Product description

- Inox Care is a durable and versatile stainless steel range that combines accessibility and hygiene in a modern design
- base plate concealed by cover plate blind
- Preparation for later easy replacement of the cover plate blind with lift-up support rails vario, Wall-support handles vario and Lift-up shower seat vario
- not suitable for lift-up support rails with E-Button vario, connection covered with mounting plate
- sealing of the drilling points (DIN 18534-1) in conjunction with NORMBAU fixing sets 7470xxx
- Fixing set has to be determined according to conditions on site, is to be ordered separately



Vario



008 009

PDF-Datasheet. All data without guarantee. Copyright NORMBAU, generated 15.01.2026